Code F5089X6

BUILT-IN MIXER WITH 2/3 OUTLETS DIVERTER

- 2/3 outlets diverter
- exposed part only
- metal plate
- **built-in part to be ordered separately**

IMAGE

Finishing

- CR — CHROM
- SN — BRUSHED NICKEL
- OR — GOLD
- OS — BRUSHED GOLD
- BR — OLD BRONZE
- RA — ANTIQUE COPPER

PRODUCTS NEEDED TO BE ORDERED SEPARATELY

Built-in part

GARANTITO 7 ANNI GUARANTEED 7 YEARS

See the general sales conditions in our current pricelist

fima CARLO FRATTINI rubinetterie

F5089X6

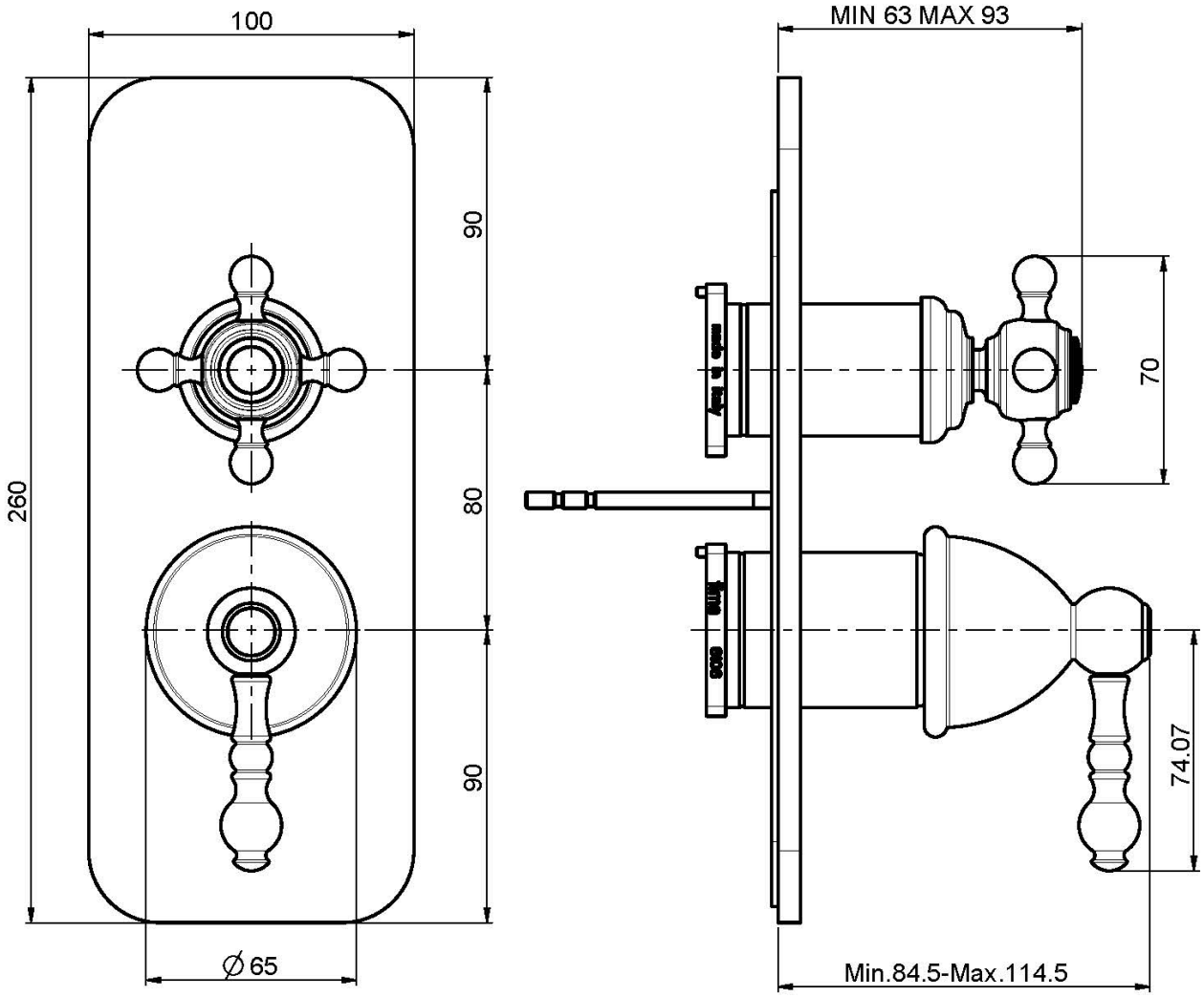

This drawing is the property of FIMA Carlo Frattini. Any complete or partial reproduction, or any transmission to third party without FIMA Carlo Frattini authorization is forbidden.