Code F4000

BUILT-IN PART

IMAGE

GARANTITO 7 ANNI GUARANTEED 7 YEARS

See the general sales conditions in our current pricelist

fima | CARLO FRATTINI rubinetterie

F4000

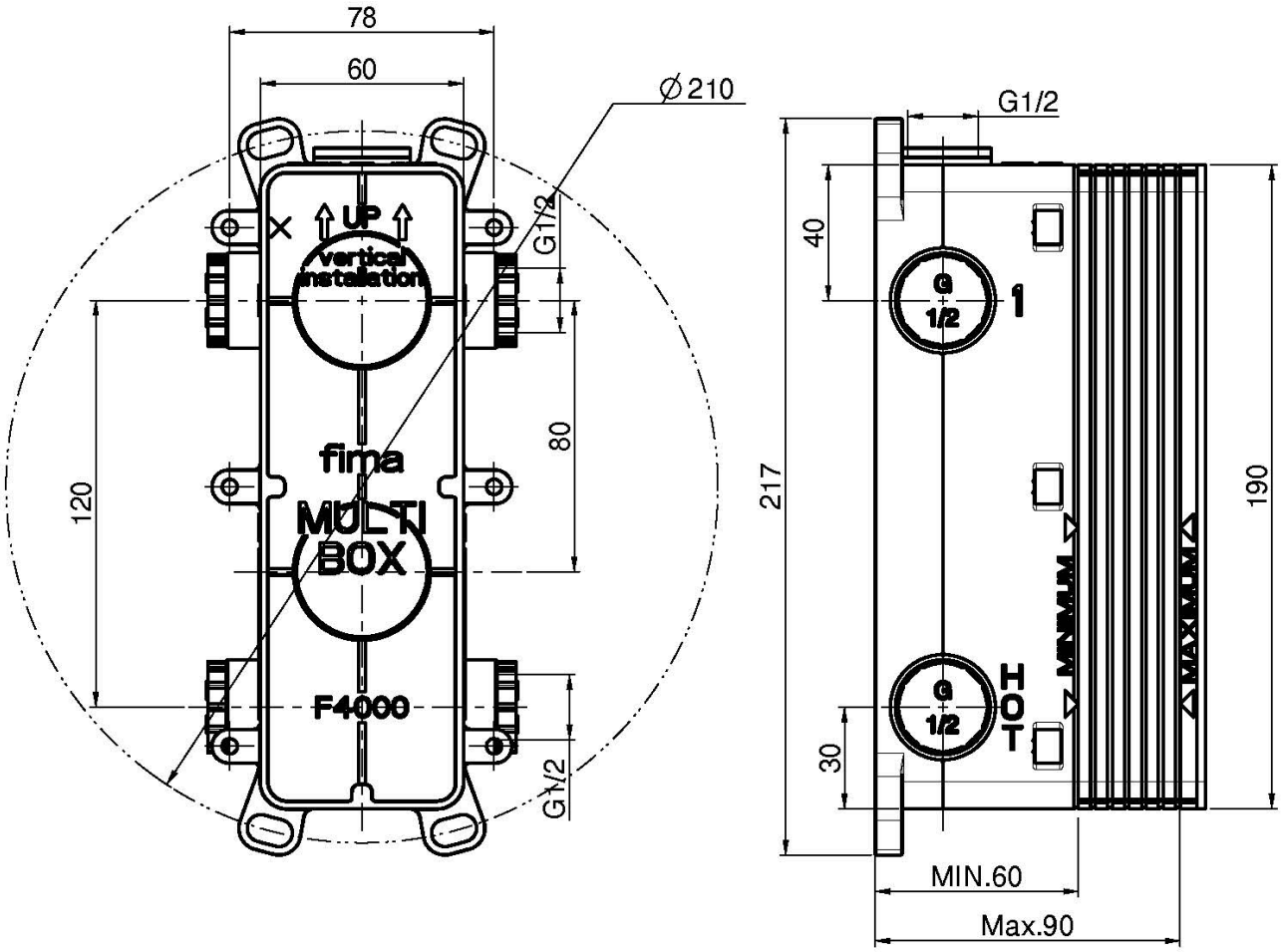

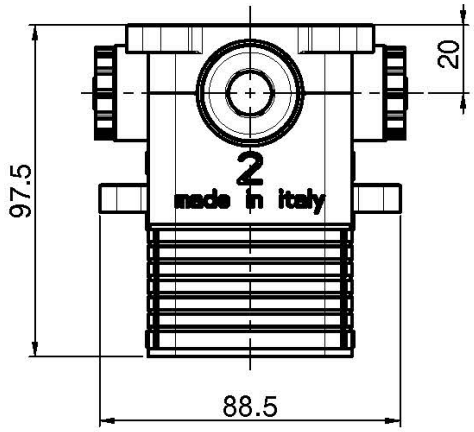

This drawing is the property of FIMA Carlo Frattini. Any complete or partial reproduction, or any transmission to third party without FIMA Carlo Frattini authorization is forbidden.