fima CARLO FRATTINI rubinetterie

Code F4074

EXPOSED THERMOSTATIC BATH MIXER WITH SHOWER SET

- n. 2 eccentric couplings 1/2”
- chromalux flexible hose 1500 mm
- handshower with antilimestone nozzles
- shower holder
- diverter

Finishing

CR CHROM

IMAGE

GARANTITO 7 ANNI GUARANTEED 7 YEARS

See the general sales conditions in our current pricelist

fima CARLO FRATTINI rubinetterie

F4074CR

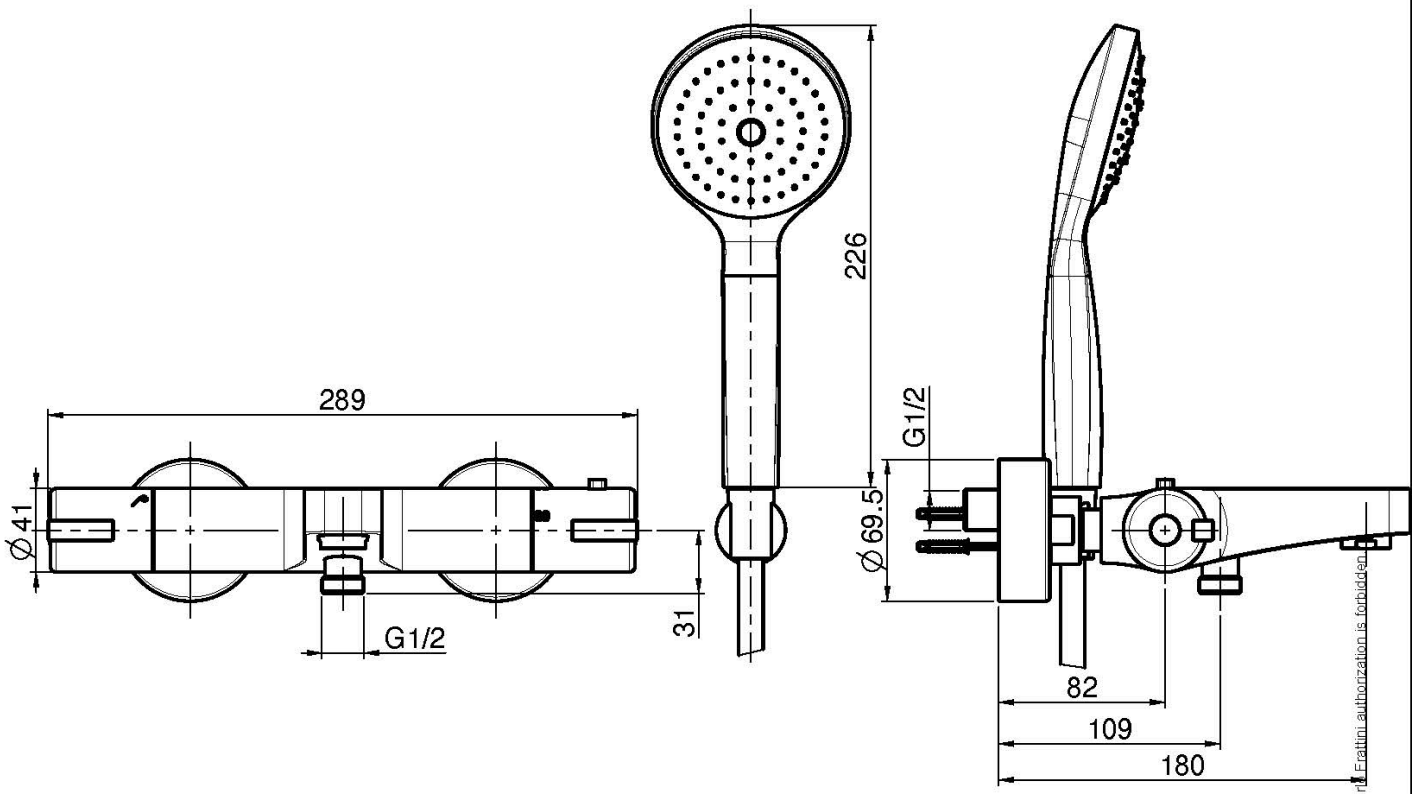

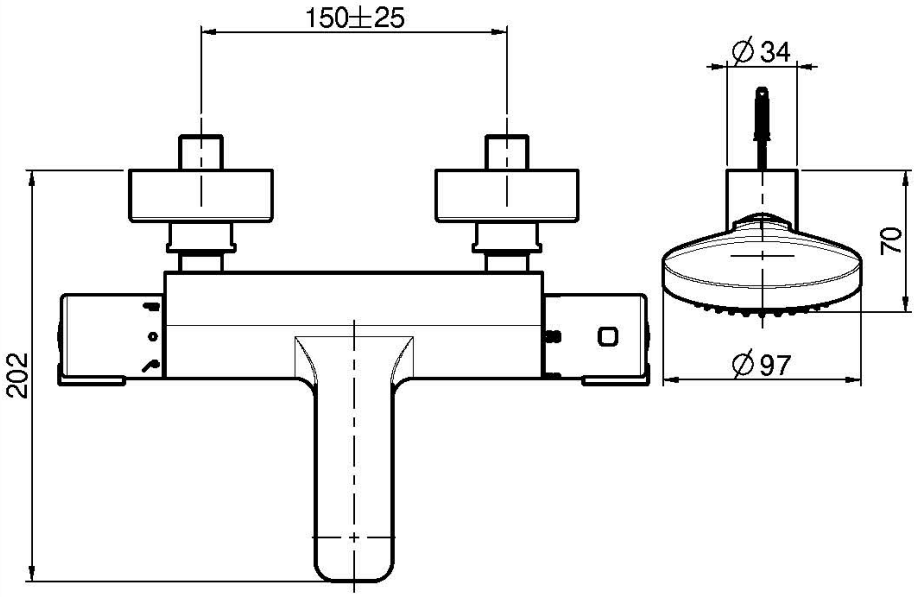

This drawing is the property of FIMA Carlo Frattini. Any complete or partial reproduction, or any transmission to third party without FIMA Carlo Frattini authorization is forbidden.