Code F3781W

WASH BASIN MIXER

- n. 2 flexible hoses
- swivel spout
- pop-up waste 1”1/4
- **this product is available without waste (see page 18)**
- **this product is available with click clack pop-up waste (see page19)**

Finishing

CR CHROM

IMAGE

GARANTITO 7 ANNI GUARANTEED 7 YEARS

See the general sales conditions in our current pricelist

fima CARLO FRATTINI

F3781WCR

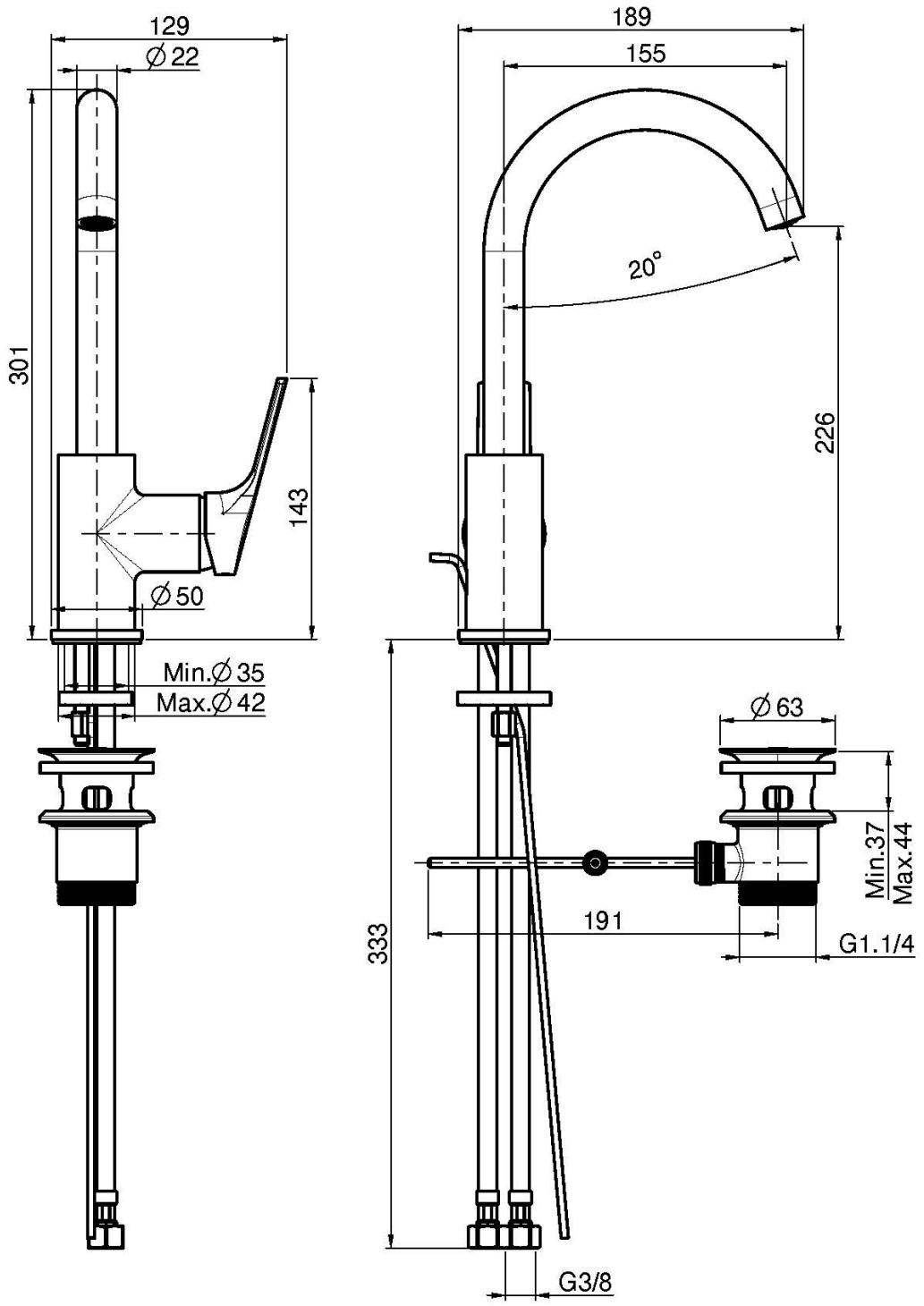

This drawing is the property of FIMA Carlo Frattini. Any complete or partial reproduction, or any transmission to third party without FIMA Carlo Frattini authorization is forbidden.